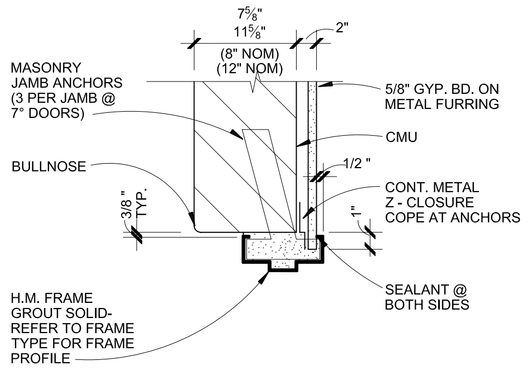

1 G.003 H.M. FRAME - JAMB

SCALE: 1 1/2" = 1'-0"

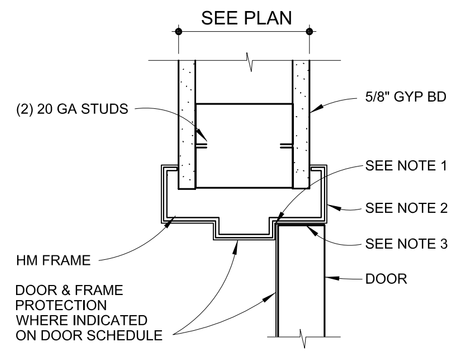

NOTES:

1. TERMINATE HINGE JAMB PROTECTION ON INSIDE EDGE
2. FULL WRAP PROTECTION ON LATCH JAMB
3. FIELD CUT DOOR PROTECTION AT HINGES

2 G.003 JAMB (WITH DOOR AND FRAME PROTECTION)

SCALE: 3" = 1'-0"

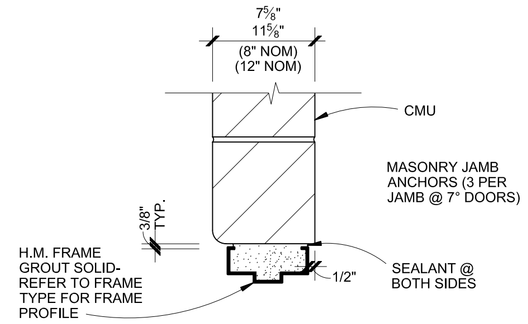

3 G.003 H.M. FRAME - JAMB

SCALE: 1 1/2" = 1'-0"

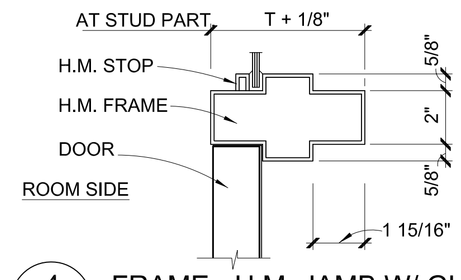

4 G.003 FRAME - H.M. JAMB W/ GLASS

SCALE: 3" = 1'-0"

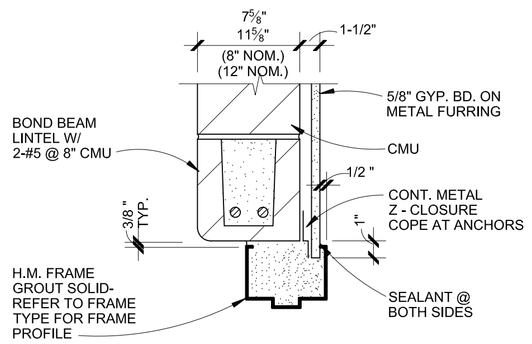

5 G.003 H.M. FRAME - HEAD

SCALE: 1 1/2" = 1'-0"

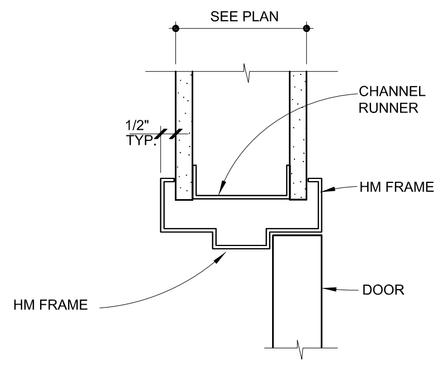

6 G.003 HEAD

SCALE: 1 1/2" = 1'-0"

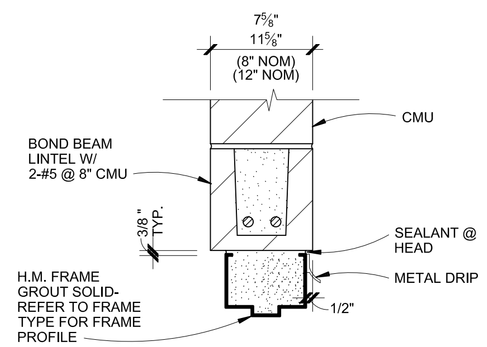

7 G.003 H.M. FRAME - HEAD

SCALE: 1 1/2" = 1'-0"

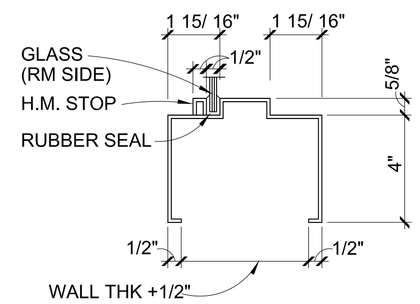

8 G.003 FRAME - H.M. BASE W/ GLASS

SCALE: 3" = 1'-0"

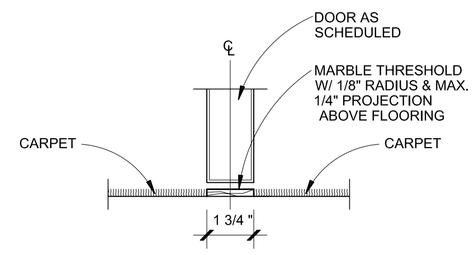

9 G.003 CARPET TO CARPET- TRANSITION

SCALE: 3" = 1'-0"

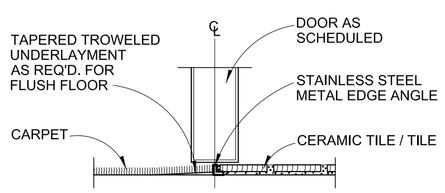

10 G.003 CARPET TO CERAMIC TILE / TILE - TRANSITION

SCALE: 3" = 1'-0"

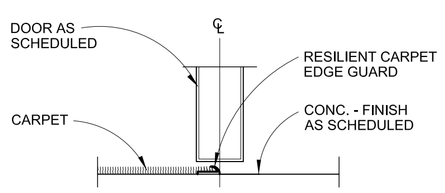

11 G.003 CARPET TO CONC. - TRANSITION

SCALE: 3" = 1'-0"

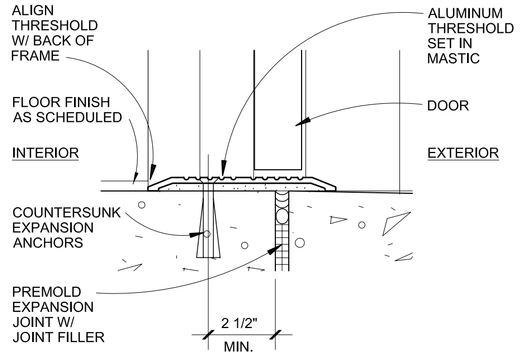

12 G.003 EXT. DOOR SILL DETAIL

SCALE: 3" = 1'-0"

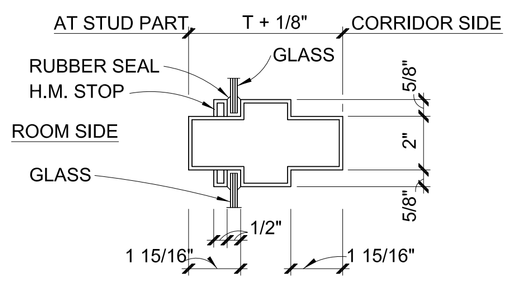

13 G.003 FRAME - H.M. W/ GLASS

SCALE: 3" = 1'-0"

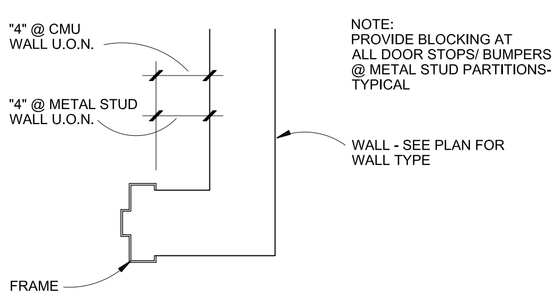

TYP. JAMB LOCATION

SCALE: 1/4" = 1'-0"

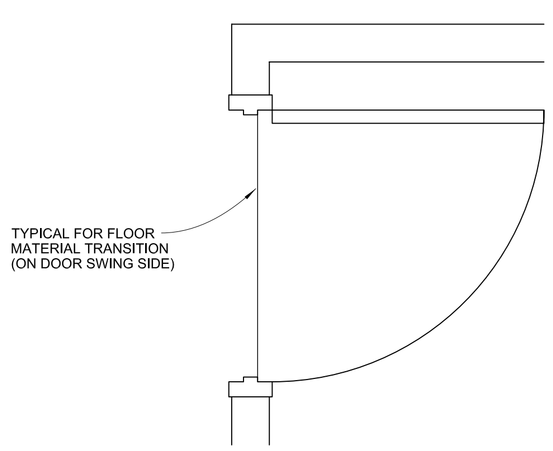

FLOOR MATERIAL TRANSITION

SCALE: NONE

ACCURATE Auto Carriers, Inc.

TRUCK & REPAIR, INC.

FES GROUP
Facility Engineering Services

28036 Oakland Oaks Ct.
Wixom, MI 48393
Phone: (248) 344-2800
Fax: (248) 344-1650
Web: www.fesgroupllc.com

Pkg.:	Issued For:	Date:
	•BIDS	•03-23-09
	•95% OWNER REVIEW	•02-01-09
	• SPA	• xx/xx/xx

Accurate Auto Carriers
Maintenance Facility

In Charge: JD
Designed: AM
Drawn: BM
Checked: AM
Approved: AM Date: 10/30/08

Sheet Title:

Door Details

Job Number: MI-08060

Sheet Number: G.004