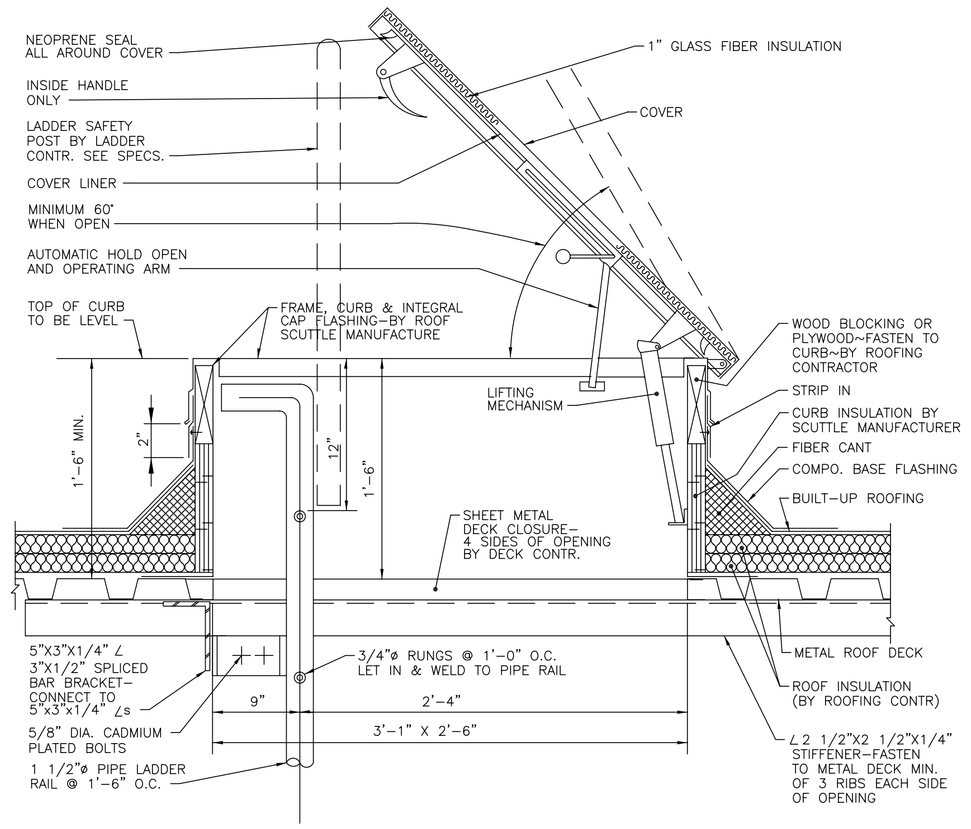

01 A1.0.0R

ROOF HATCH DETAIL

NOT TO SCALE

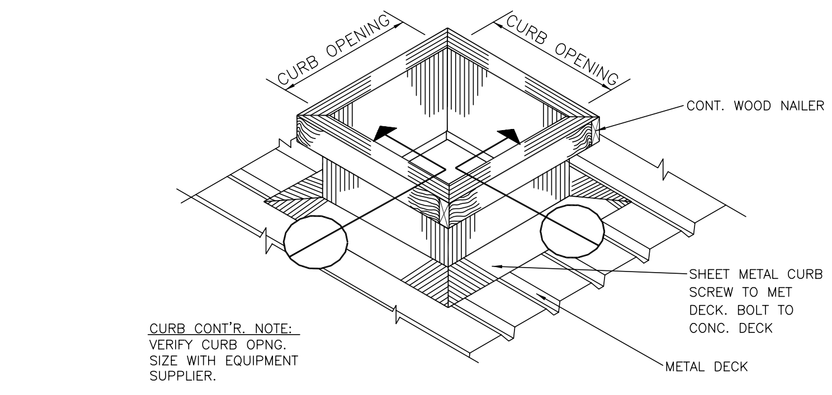

ISOMETRIC DETAIL – PREFAB. ROOF CURB

NO SCALE

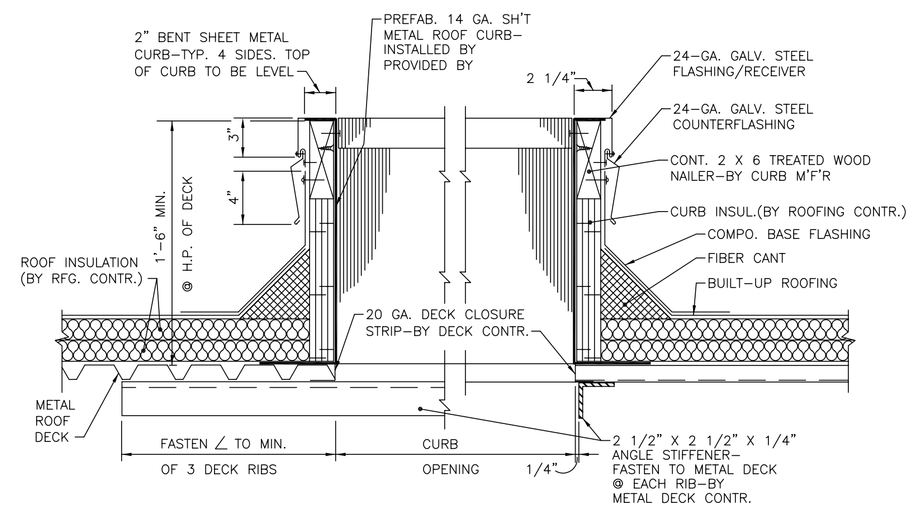

02 A1.0.0R

PREFAB. ROOF CURB DETAIL

NOT TO SCALE

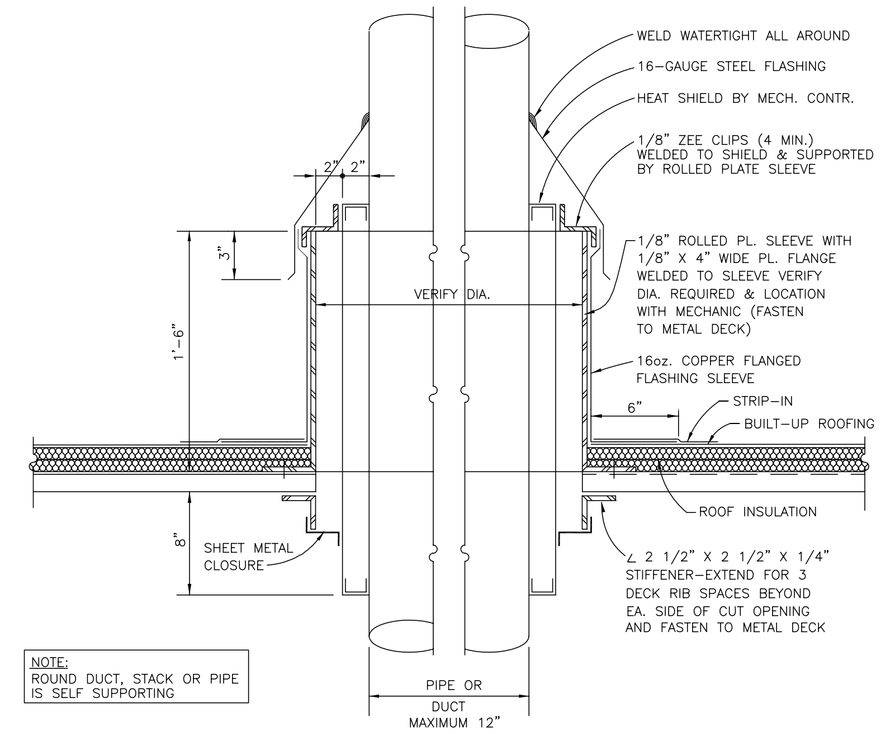

03 A4.8.01

TYP. THRU ROOF HOT VENT DETAIL

NOT TO SCALE

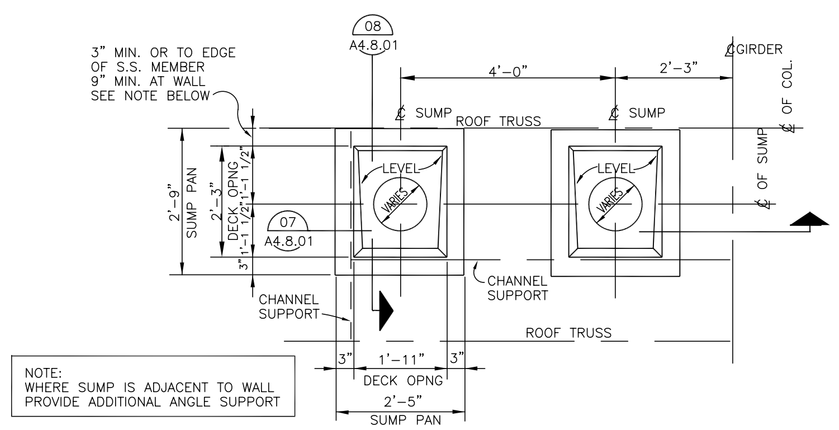

04 A1.0.0R

DOUBLE ROOF SUMP PAN PLAN

NOT TO SCALE

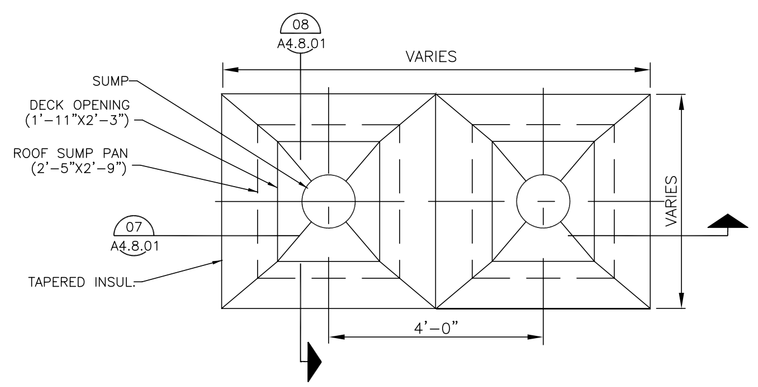

05 A1.0.0R

TAPERED INSUL. @ SUMP PAN

NOT TO SCALE

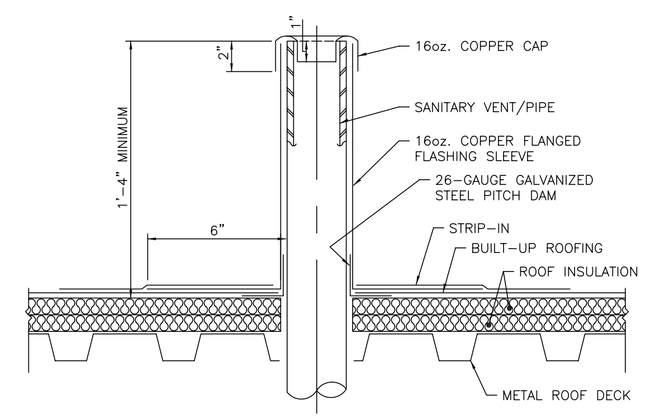

06 A4.8.01

TYP. SANITARY VENT DETAIL

NOT TO SCALE

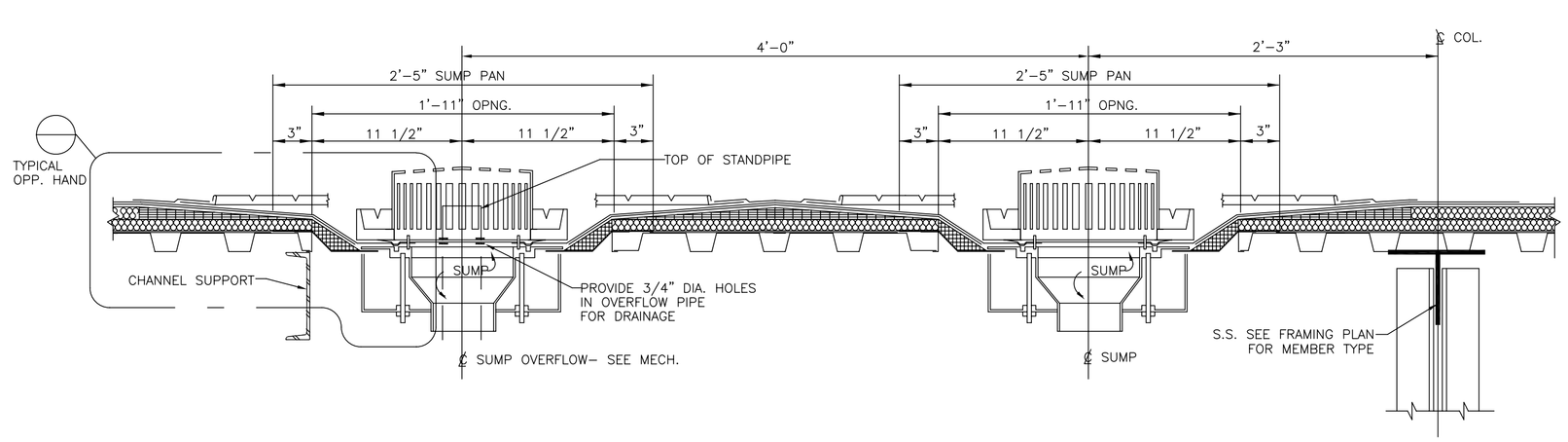

07 A4.8.0R

DOUBLE ROOF SUMP SECTION

NOT TO SCALE

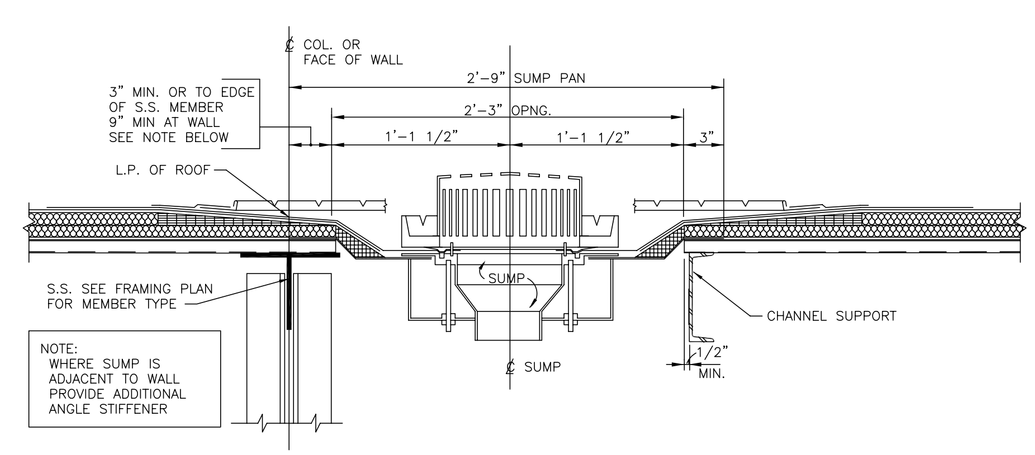

08 A4.8.0R

ROOF SUMP DETAIL

NOT TO SCALE

TRUCK & REPAIR, INC.

FES GROUP
Facility Engineering Services
28036 Oakland Oaks Ct.
Wixom, MI 48393
Phone: (248) 344-2800
Fax: (248) 344-1650
Web: www.fesgroupllc.com

Pkg.:	Issued For:	Date:
	•BIDS	03–23–09

Accurate Auto Carriers Maintenance Facility

In Charge:	JD	
Designed:	AM	
Drawn:	BM	
Checked:	AM	
Approved:	AM	Date: 2/3/09

Sheet Title:

ROOF DETAILS

Job Number: MI–08060

Sheet Number: **A4.8.01**