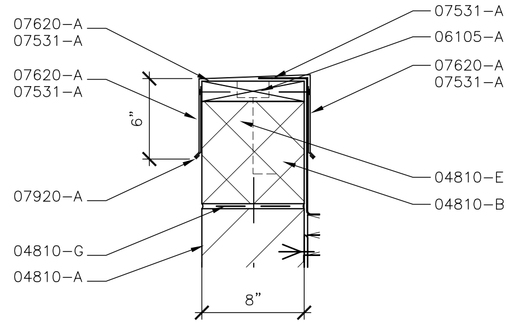

01 A5.0.01 A5.0.02 PARAPET DETAIL

SCALE 1–1/2"=1'–0"

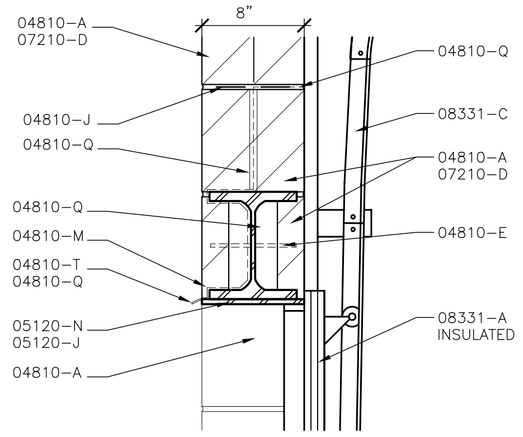

02 A5.0.01 OVERHEAD DR. DETAIL

SCALE 1–1/2"=1'–0"

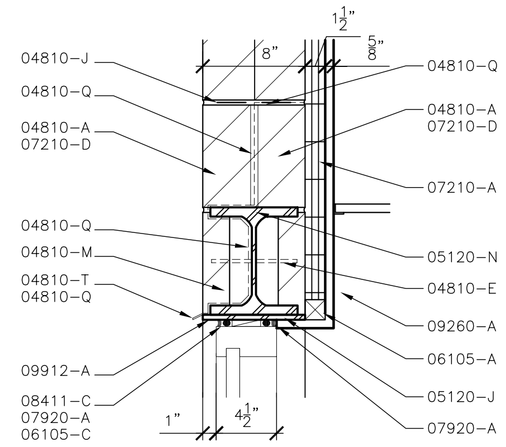

03 A5.0.02 WINDOW HEAD DETAIL

SCALE 1–1/2"=1'–0"

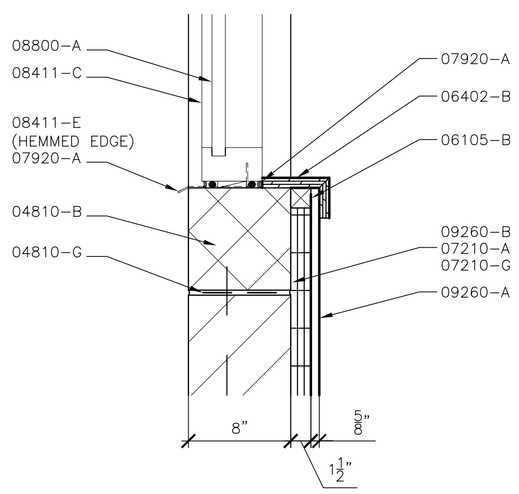

04 A5.0.02 WINDOW SILL DETAIL

SCALE 1–1/2"=1'–0"

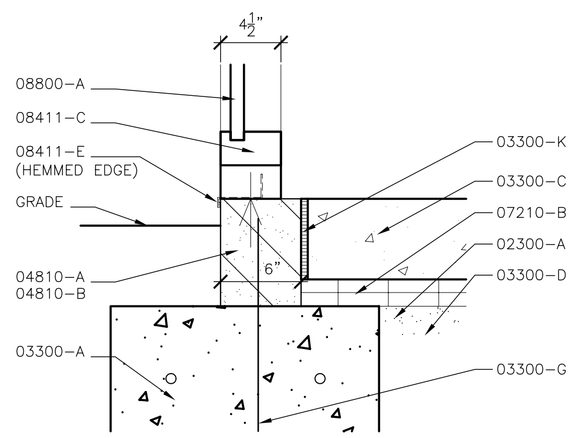

05 A5.0.02 STOREFRONT BASE DETAIL

SCALE 1–1/2"=1'–0"

KEYNOTE LIST

DIVISION 2 SITE

02300 A Compacted Sand Fill
B Compacted Stone Fill

02620 A Foundation Drain Tile

DIVISION 3 CONCRETE

03300 A Concrete Footing
B Concrete Foundation Wall
C Concrete Slab
D Vapor Retarder
E Reinforced Concrete Slab
F Concrete Retaining Wall
G Steel Reinforcing
H Welded Wire Fabric
J Concrete Filled Stair Tread
K Premolded Joint Filler
L Key Way
M Concrete Sill Wall
N Concrete Mass Slab

DIVISION 4 MASONRY

04810 A Concrete Masonry Unit Construction
A.1 Not Used
B Grout Solid
C Masonry Bond Beam
D Mortar
E Masonry Anchor
F Masonry Tie
G Horizontal Reinforcing
H Cavity Filler
J Structural Reinforcing
K Expansion Joint Filler
L Flashing
M Weep with Screen
N Bond Beam
P Cavity
Q Through–Wall Flashing
R Flashing End Dam
S Drainage Gravel
T Drip Edge
U Bond Breaker
V Felt Membrane
W PVC Scupper
X Cast Stone
Y Drip Pan Flashing

DIVISION 5 METALS

05120 A Steel Column
B Steel Beam
C Steel Angle
D Steel Channel
E Steel Tube
F Steel Rod
H Steel Bearing Plate, Grout Solid w/ Non–Shrink Grout
J Steel Plate (Galvanized)
K Steel X–Bracing
L Steel Bent Plate
M Steel Anchor Bolt
N Steel Lintel
O Steel Sleeve
P Non–Shrink Grout
Q Steel Brick Frame
R Steel Anchor
S Steel Stud

05210 A Steel Joist
B Steel Joist Girder
C Steel Cross Bracing

05310 A Steel Roof Deck
B Steel Form Deck

05400 A Cold Formed Metal Framing

05500 A Steel Tube
B Steel Channel
C Steel Angle
D Steel Rod/Bar
E Steel Beam
F Steel Plate
G Concrete Filled Steel Pipe Bollard
H Steel Ladder
J Steel Grating
K Railed Floor Plate
L Expanded Metal Mesh
M S.S. Rod Hanger

05511 A Steel Stringer
B Steel Stair Riser and Tread

05521 A Steel Handrail
B Steel Railing

05721 A Glass Supported Railing
B Tempered Glass Panel
C Cap Rail
D Handrail/Support Bracket/Escutcheon
E Base and Support Extrusion
F Base Trim

05811 A Expansion Joint Assembly

DIVISION 6 WOOD AND PLASTICS

06100 A Wood Framing

06105 A Wood Blocking (Pressure Treated)
B Wood Furring
C Shim (Wood)
D Wood Cleat Ledger
E Plywood

06402 A Wood Trim
B Plastic Laminate Sill
C Composite Material
D Particle Board
E Cabinet Hinge
F Drawer Slide
G Drawer / Door Pull
H Grommet
I Shelf Brackets and Standards
J Lock
K Piano Hinge
L Clothes Rods and Supports
M Plastic Laminate Clad Wall Hung Cabinet w/ Adj. Shelves
N Plastic Laminate Clad Wall Base Cabinet w/ Adj. Shelves
O Plastic Laminate Clad Countertop
P Plastic Laminate Clad Backsplash

DIVISION 7 THERMAL AND MOISTURE PROTECTION

07141 A Water Seal Membrane

07190 A Water Repellants (sealer)

07210 A Board Insulation
B Underslab Rigid Insulation
C Blanket/Batt Insulation
D Loose/Granular Insulation
E Foam Insulation
F Sound Insulation
G Vapor Barrier

07272 A Moisture Retarding Membrane

07412 A Manufactured Metal Panel (Insulated)
B Metal Base w/ 1/4" Diameter Weep Holes, @ 24" O.C. Max.
C Metal Edge Trim
D Metal Soffit/Facia
E Expansion Joint Compressible Filler

07531 A Fully Adhered Single Ply Membrane Roofing
B Membrane Flashing/Counter Flashing
C Rigid Roofing Insulation
D Membrane Pad
E Roof Expansion Joint System
F Pressure Bar
G Termination Bar
H Premolded Pipe Flashing
J Roof Penetration Flashing

07620 A Metal Coping
B Metal Gravel Stop
C Metal Flashing
D Metal Closure
E Metal Drip w/ Hemmed Edge
F Metal Trim w/ Hemmed Edge
G Metal Gutter/Downspout
H Rain Conductor
J Stepped Metal Counter–Flashing

07720 A Roof Access Hatch
B Manufactured Curb
C Unit Skylight
D Heat/Smoke Vents

07811 A Sprayed Fire Resistive Materials

07842 A Fire Safing

07920 A Sealant
B Backer Rod
C Joint Filler

DIVISION 8 DOORS AND WINDOWS

08111 A Hollow Metal Door
B Hollow Metal Frame
C Jamb Anchor
D Under Masonry
E Under Hardware

08125 A Aluminum Frames

08311 A Access Door and Frame

08331 A Overhead Sectional Door
B Metal Closure Panel
C Steel Guide Track

08411 A Aluminum Entrance Door
B Aluminum Entrance Frame
C Aluminum Window Frame
D Aluminum Closure
E Aluminum Sill Flashing
F Clip Angle
G Aluminum Bracket System
H Aluminum Cap Flashing
J Aluminum Angle Support
K Aluminum Gutter

08711 A Thresh
B Drip

08800 A Insulated Glass
B Safety Glass/Insulated/Tinted
C Float Glass
D Mirror
E Glazing Sealant
F Setting Block
G Safety Glass

DIVISION 9 FINISHES

09253 A Gypsum Sheathing

09260 A Gypsum Wallboard
B Light Gauge Steel Framing
C Steel Stud Infill
D Steel Runner
E Steel Furring
F Steel Z Furring
F Steel Bracing
H Corner Bead
J Expansion Joint P.
K Control Joint
L Hat Channel
M Hanger Wire

09310 A Ceramic Tile
B Ceramic Tile Base
C Stone Threshold

09385 A Dimension Stone Tile
B Metal Edge Trim

09511 A Acoustic Panel Ceiling in Metal Suspension System
B Edge Angle
C Egg Create Lense

09651 A Resilient Tile Flooring

09653 A Resilient Wall Base and Accesory
B Reducer Strip
C Transition

09912 A Paint

09945 A Multi–Colored Interior Coatings

09960 A Elastometric Coating

DIVISION 10 SPECIALTIES

10155 A Metal Clad Toilet Partition/Privacy Screen
B Privacy Screen

10200 A Louver

10270 A Access Flooring

10350 A Flagpole

10431 A Sign

10505 A Metal Locker

10520 A Fire Extinguisher Cabinet
B Fire Extinguisher

10605 A Wire Mesh Partitions
B Gate

DIVISION 11 EQUIPMENT

11160 A Dock Leveler
B Dock Bumper
C Dock Shelter/Seal
D Dock Lock

DIVISION 12 FURNISHINGS

12484 A Floor Mat
B Floor Mat Frame

DIVISION 13 SPECIAL CONSTRUCTION

13851 A Fire Alarm

DIVISION 14 CONVEYING SYSTEMS

14240 A Hydraulic Elevator
B Metal Door Frame
C Traction Elevator

DIVISION 15 MECHANICAL

15415 A Water Cooler

15440 A Service Sink
B Lavatory
C Water Closet
D Urinal
E Floor Drain
F Domestic Water
G Roof Sump
H Overflow
J Roof Conductor
K Pre–fabricated Trench Drain

15736 A HVAC Unit

15815 A Metal Duct

15855 A Diffuser
B Register
C Grille

DIVISION 16 ELECTRICAL

16430 A Switchgear

16442 A Panelboard

16511 A Incandescent Light Fixture
B Fluorescent Light Fixture
C Exit Light Fixture
D Emergency Light Fixture

16521 A Wall Mounted Fixture
B Bollard
C Pole Mounted Fixture
D Recessed Fixture

ACCURATE Auto Carriers, Inc.

TRUCK & REPAIR, INC.

FES GROUP
Facility Engineering Services

28036 Oakland Oaks Ct.
Wixom, MI 48393
Phone: (248) 344-2800
Fax: (248) 344-1650
Web: www.fesgroupllc.com

Pkg.:	Issued For:	Date:
	•BIDS	•03–23–09
	•95% OWNER REVIEW	•02–01–09

Accurate Auto Carriers
Maintenance Facility

In Charge: JD
Designed: AM
Drawn: JSJ
Checked: AM
Approved: AM Date: 12/08/08

Sheet Title:

DETAILS

Job Number: MI–08060

Sheet Number: **A5.1.01**