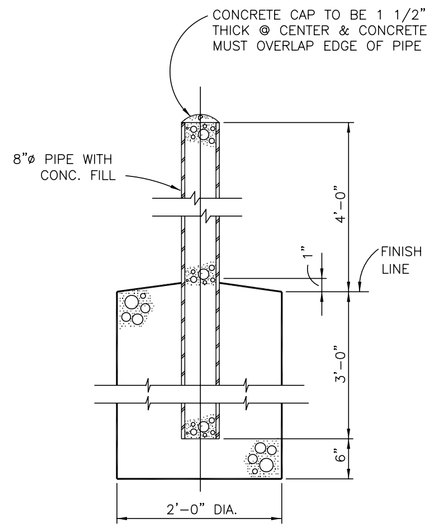

NOTES:

1. WHERE GUARD POSTS ARE LOCATED IN CONC. SLAB PROVIDE 1/2" PRE-MOULD EXPANSION JOINT MATERIAL BETWEEN SLAB AND GUARD POST FOUNDATION.

01 / A6.7.01

TYP. GUARD POST DETAIL

NOT TO SCALE

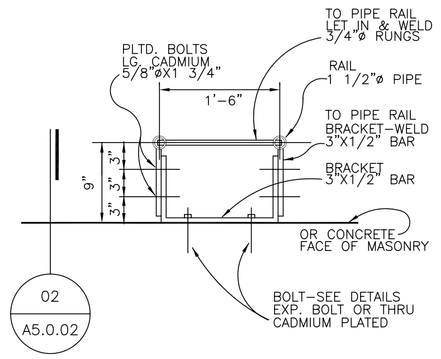

02 / A5.0.02

02 / A6.3.01

ENLARGED LADDER PLAN

NOT TO SCALE

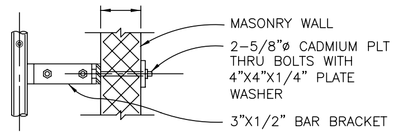

03 / A6.7.01

LADDER SECTION

NOT TO SCALE

ACCURATE Auto Carriers, Inc.

TRUCK & REPAIR, INC.

FES GROUP
Facility Engineering Services

28036 Oakland Oaks Ct.
Wixom, MI 48393
Phone: (248) 344-2800
Fax: (248) 344-1650
Web: www.fesgroupllc.com

Pkg.:	Issued For:	Date:
	BIDS	03-23-09

Accurate Auto Carriers
Maintenance Facility

In Charge: JD
Designed: AM
Drawn: BM
Checked: AM
Approved: AM Date: 2/3/09

Sheet Title:

MISC. DETAILS

Job Number: MI-08060

Sheet Number: **A6.7.01**