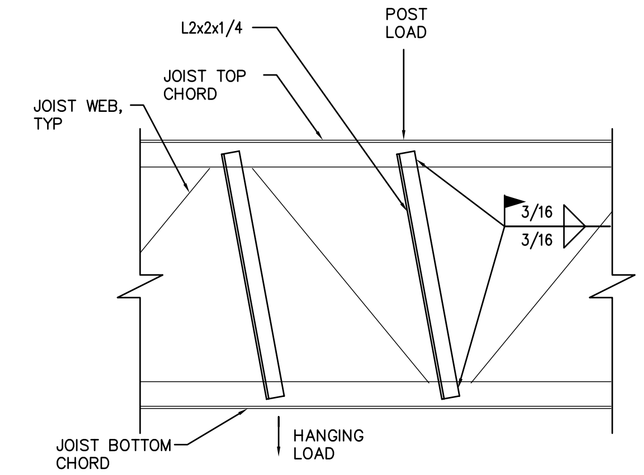

4 TYPICAL JOIST REINFORCING AT CONCENTRATED LOAD
SCALE: 1"=1'-0"

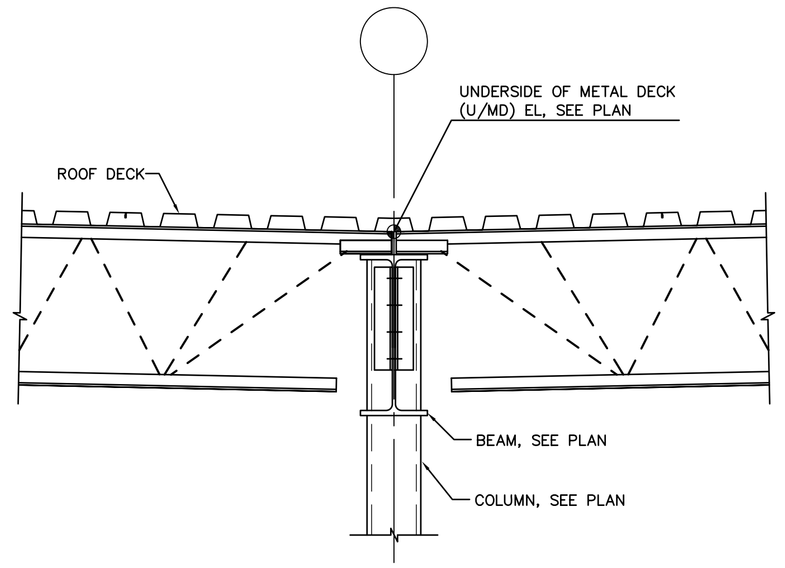

3 COLUMN BRACING DETAIL
SCALE: 1"=1'-0"

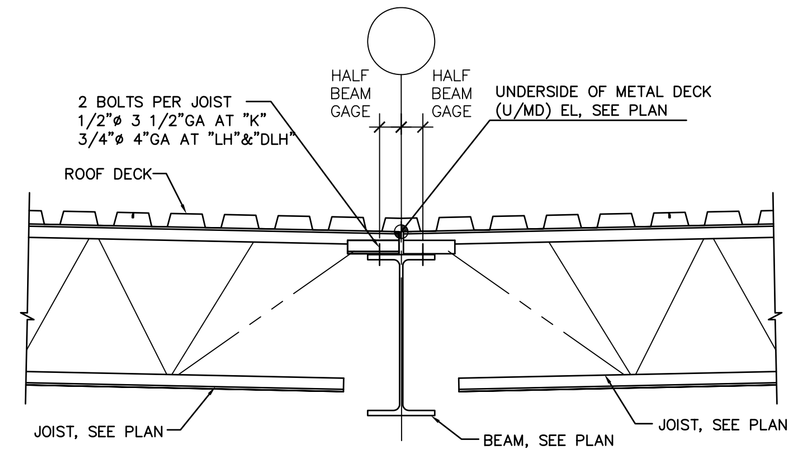

2 TYPICAL JOIST TO BEAM CONNECTION
SCALE: 1"=1'-0"

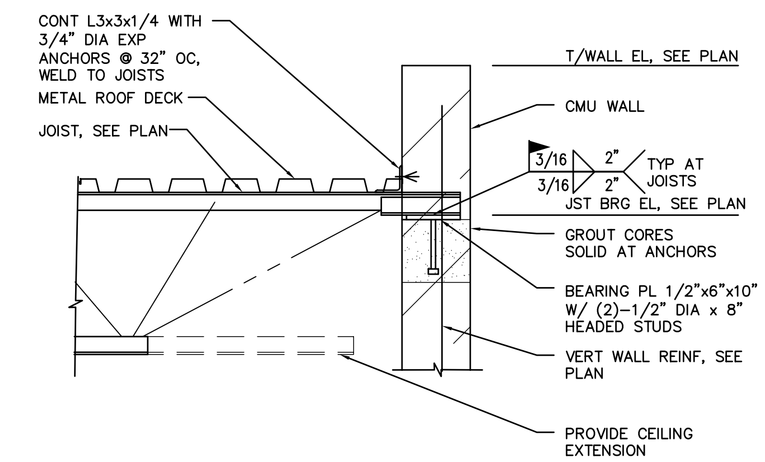

1 JOIST BEARING AT CMU WALL DETAIL
SCALE: 1"=1'-0"

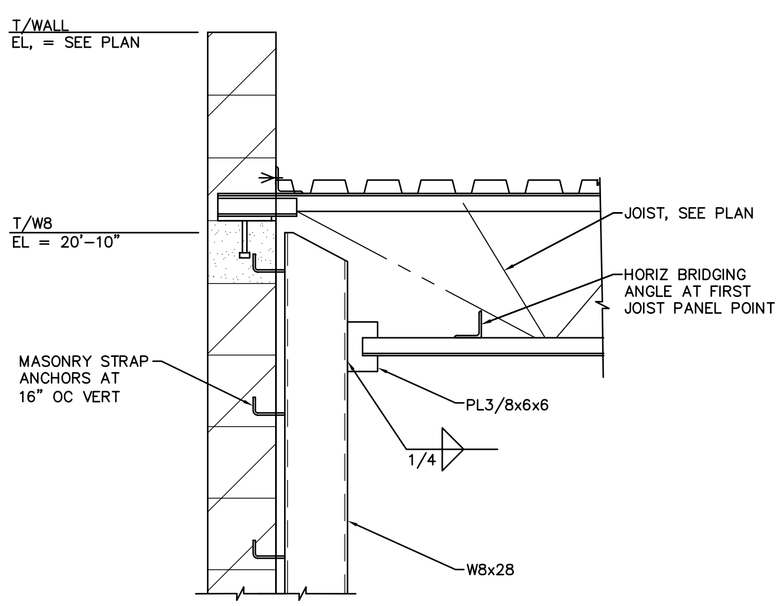

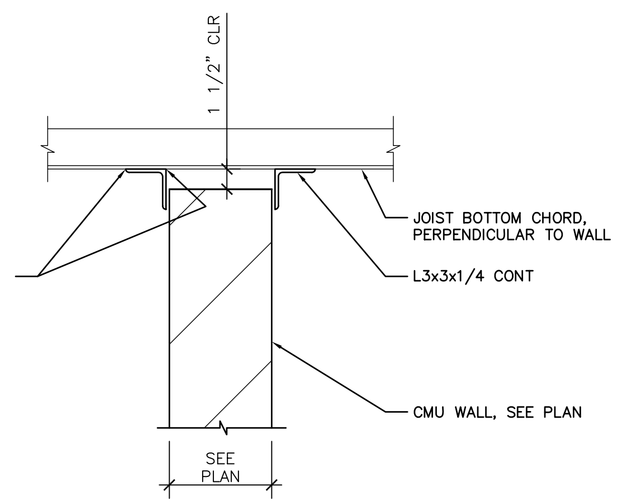

10 SECTION
SCALE: 1 1/2"=1'-0"

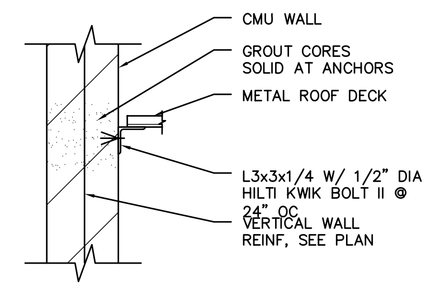

6 DECK SUPPORT TO WALL
SCALE: 1"=1'-0"

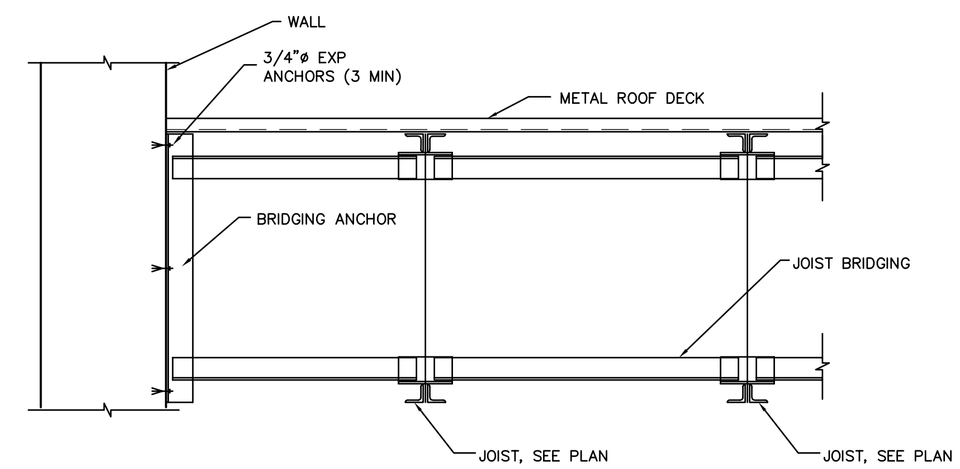

5 JOIST BRIDGING CONNECTION TO WALL
SCALE: 1"=1'-0"

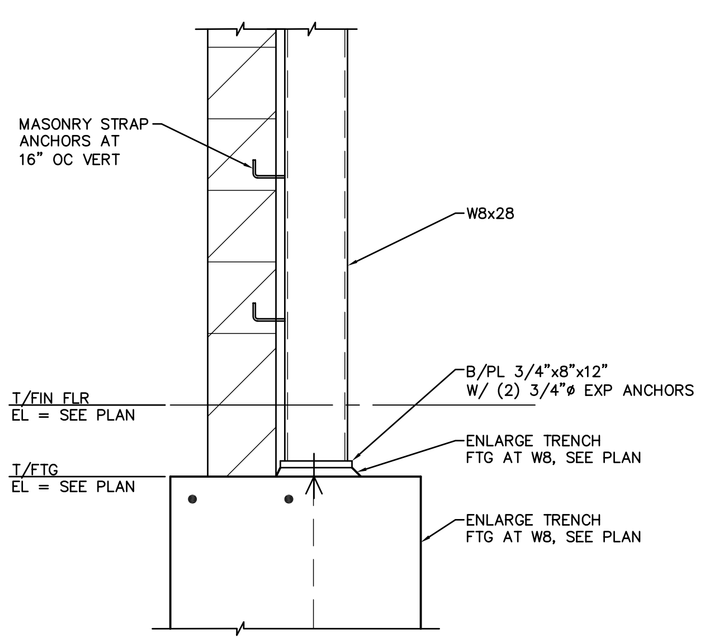

9 MASONRY PIER SUPPORT
SCALE: 1"=1'-0"

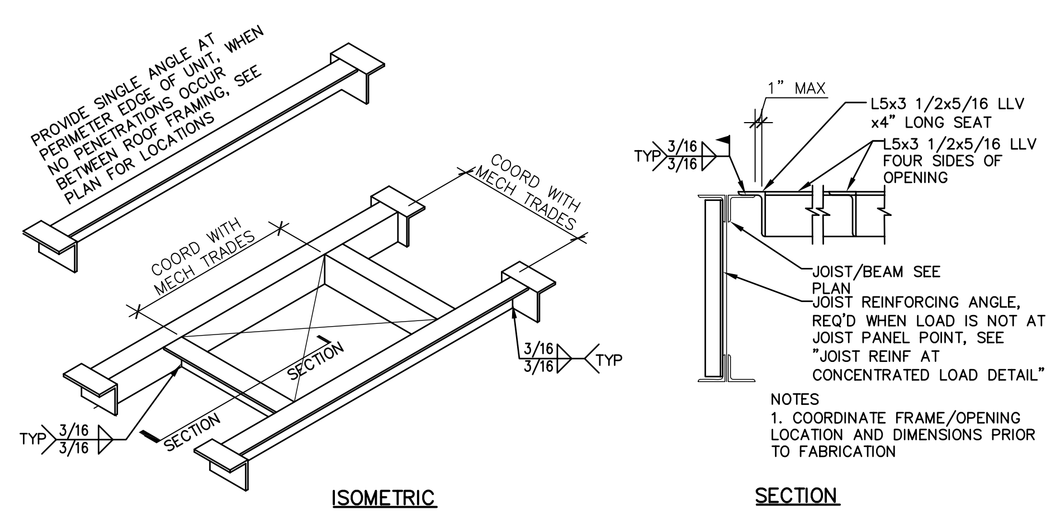

8 DROP-IN MECHANICAL RTU FRAMES
SCALE: 1"=1'-0"

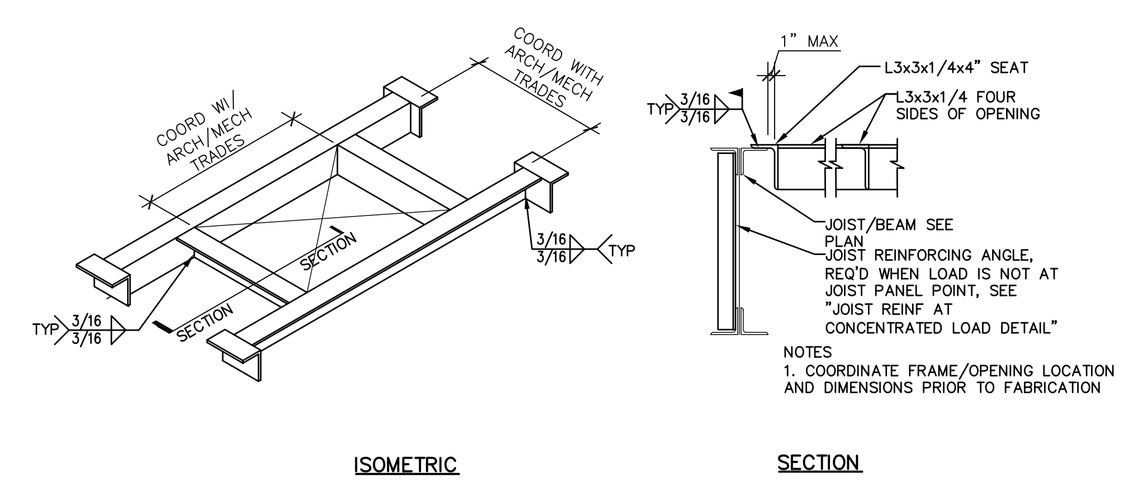

7 DROP-IN ROOF SUMP, ROOF HATCH, AND EXHAUST FAN FRAMES
SCALE: 1"=1'-0"

ACCURATE Auto Carriers, Inc.
TRUCK & REPAIR, INC.

FES GROUP
Facility Engineering Services
28036 Oakland Oaks Ct.
Wixom, MI 48393
Phone: (248) 344-2800
Fax: (248) 344-1650
Web: www.fesgroupllc.com

Pkg.:	Issued For:	Date:
	BIDS	03/23/09
	95% REVIEW	02/02/09

Accurate Auto Carriers
Maintenance Facility

In Charge:	JD	
Designed:	CAS	
Drawn:	KMK	
Checked:	CAS	
Approved:	CAS	Date: 03/19/09

Sheet Title:
JOIST SECTIONS
AND DETAILS

Job Number: MI-08060
Sheet Number: S3.2.0