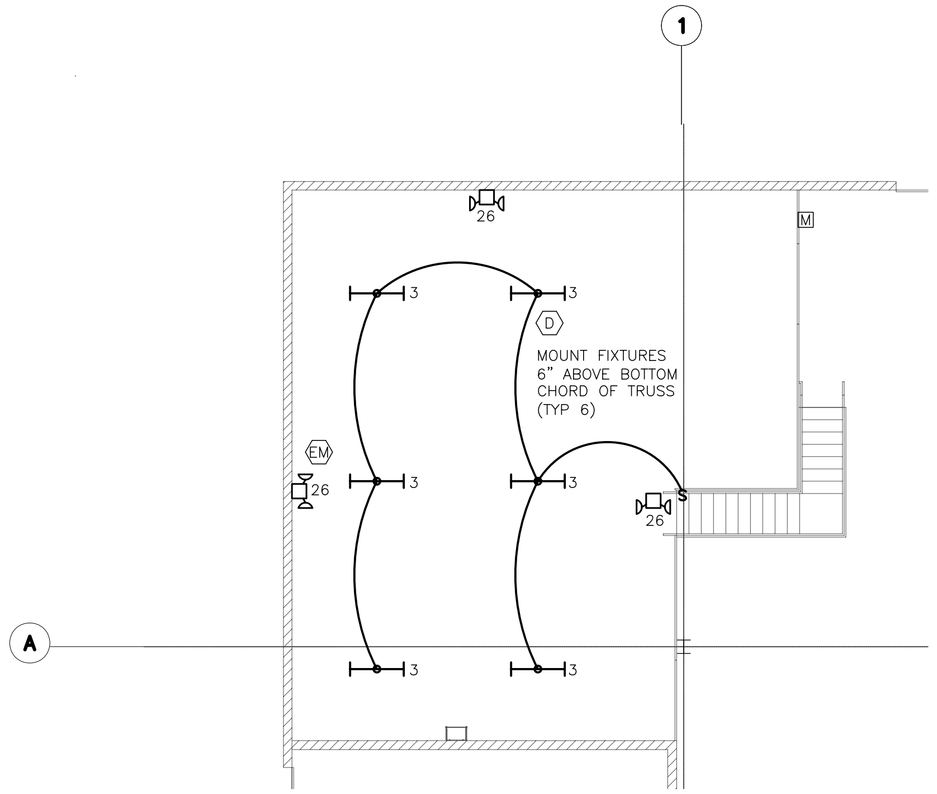

MEZZANINE PLAN
SCALE 1/8 = 1'-0"
NORTH

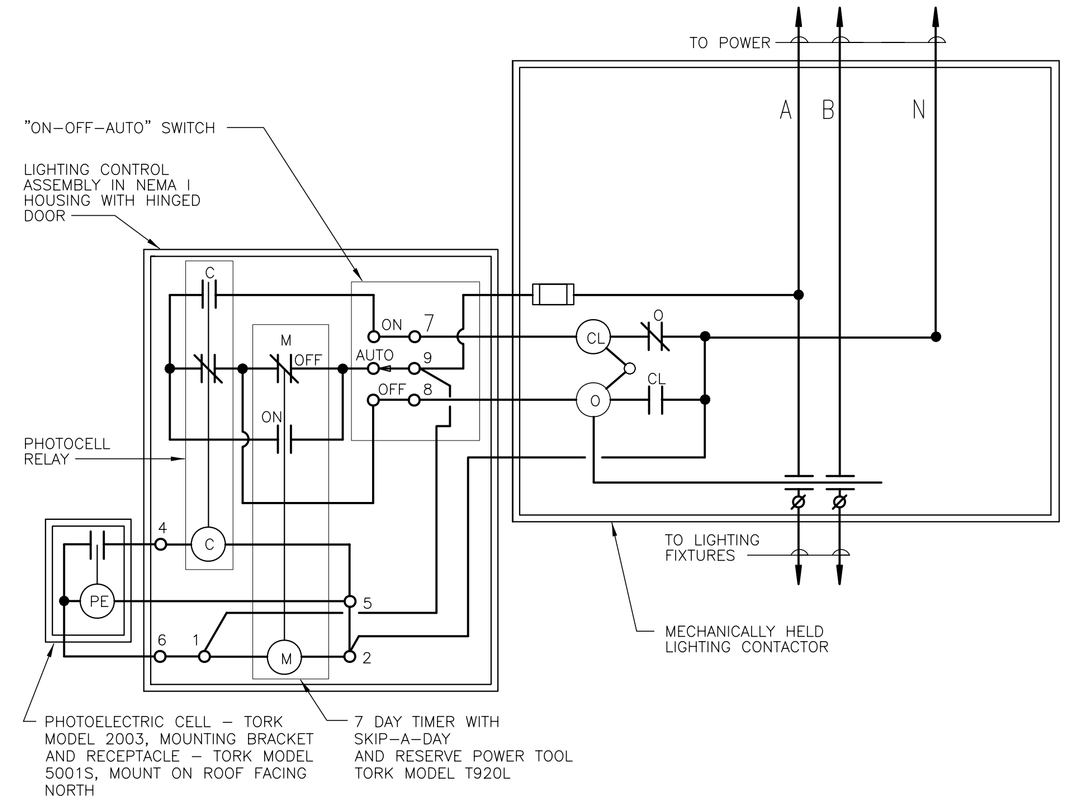

TYPICAL SITE AND BUILDING
PRIMITER LIGHTING CONTROL

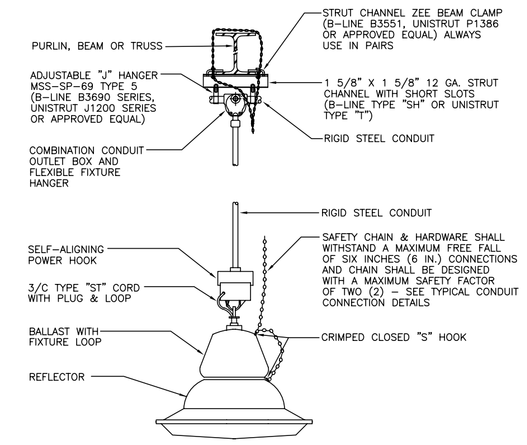

HID FIXTURE HANGING DETAIL

LIGHTING NOTES:

1. REFER TO DRAWING E0.0.01 FOR LIGHTING FIXTURE SCHEDULE, LEGENDS AND SYMBOLS.
2. FOR 120V CIRCUITS EXCEEDING 100' PROVIDE THE NEXT SIZE LARGER WIRE FOR THE CIRCUIT AMPACITY.
3. PROVIDE MISC. STEEL SUPPORT WHERE REQUIRED TO SUPPORT FIXTURES.
4. REFER TO DRAWING E2.1.01 FOR LIGHTING PANEL LOCATION.

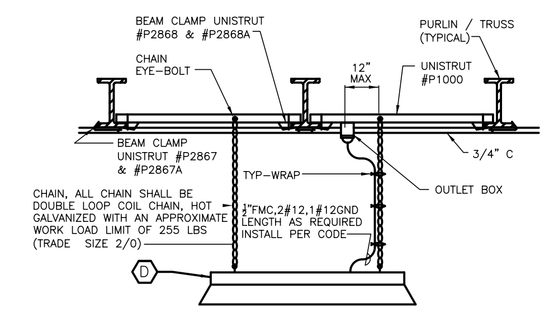

FLUORESCENT FIXTURE
HANGING DETAIL

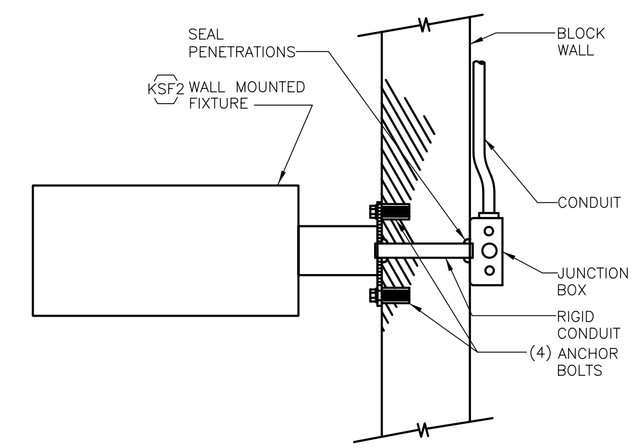

OUTDOOR WALL MOUNTED
LIGHT FIXTURE DETAIL

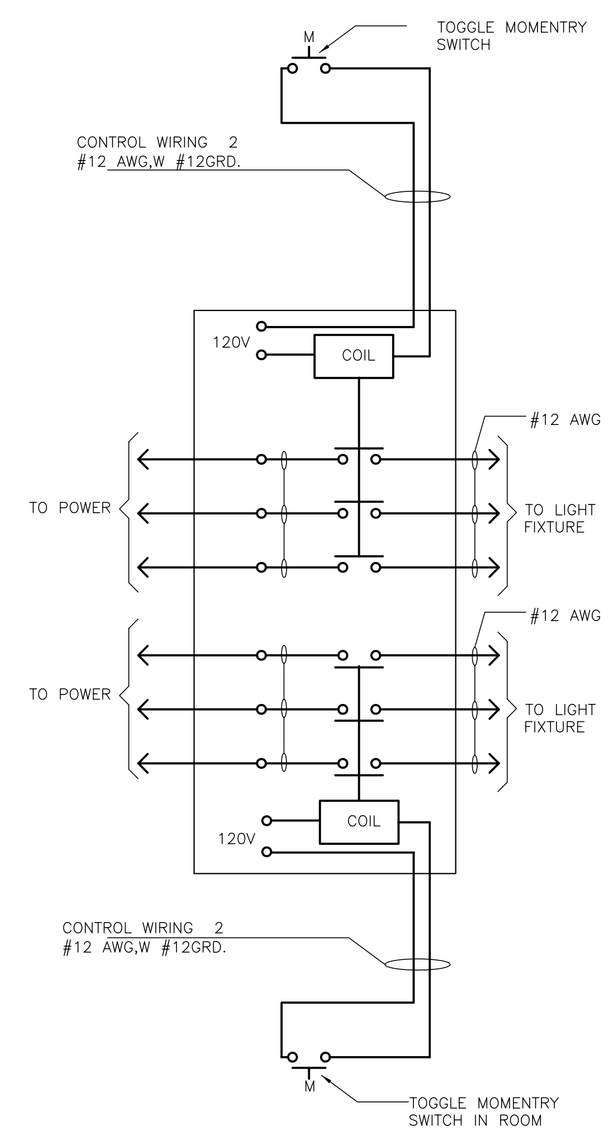

HID LIGHTING CONTROL (LC)

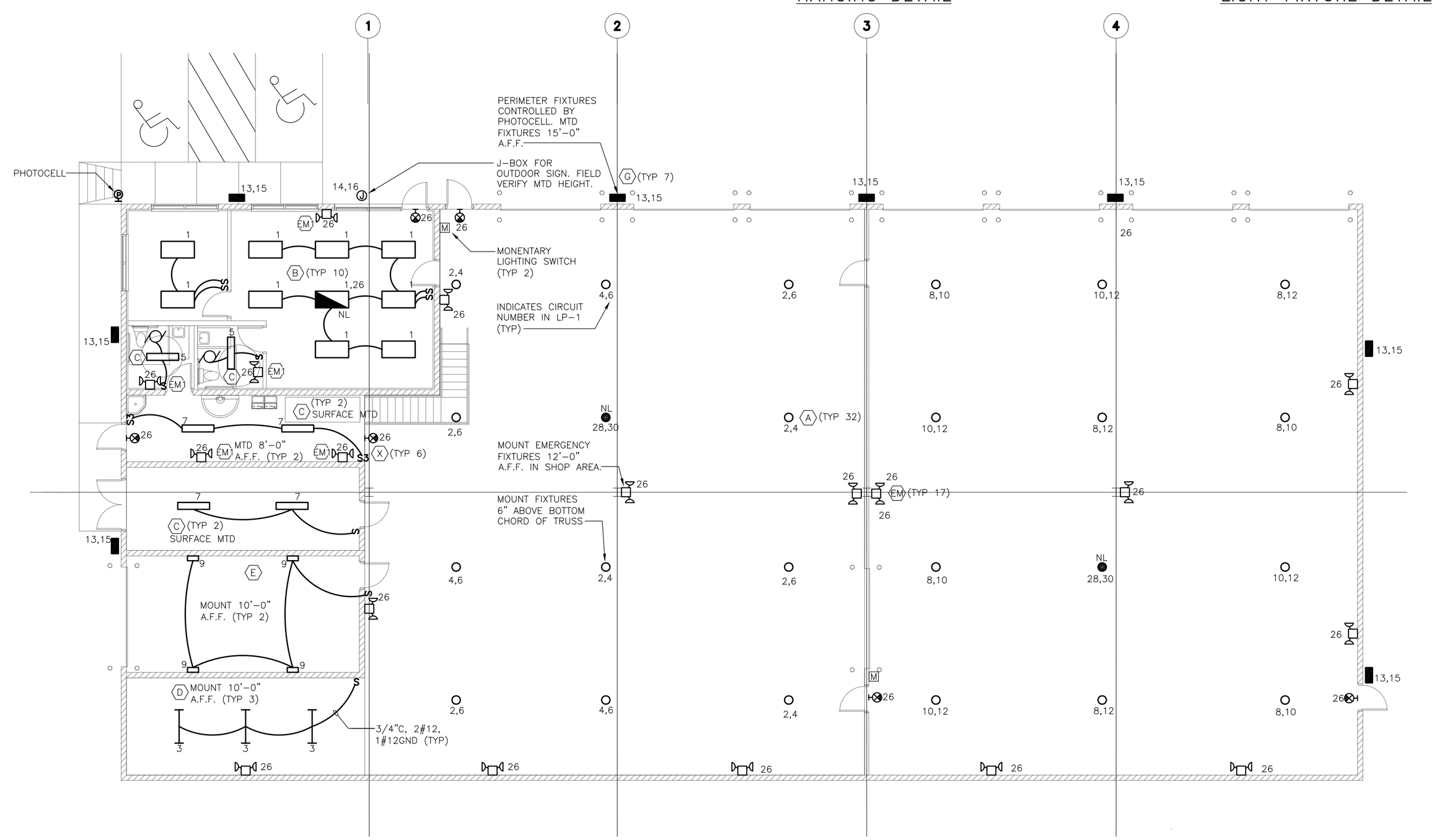

FIRST FLOOR PLAN
SCALE 1/8 = 1'-0"
NORTH

ACCURATE Auto Carriers, Inc.
TRUCK & REPAIR, INC.

FES GROUP
Facility Engineering Services
28036 Oakland Oaks Ct.
Wixom, MI 48393
Phone: (248) 344-2800
Fax: (248) 344-1650
Web: www.fesgroupllc.com

Pkg.:	Issued For:	Date:
	•BIDS	•03-23-09
	•95% OWNER REVIEW	•02-01-09
	•	•
	•	•
	•BIDS	•01-06-09

Accurate Auto Carriers
Maintenance Facility

In Charge: JD
Designed: JS, DS
Drawn: DS
Checked: JS
Approved: AM Date: 1/6/09

Sheet Title:
LIGHTING PLAN
FIRST FLOOR & MEZZANINE
AREA 01

Job Number: MI-08060
Sheet Number: E3.1.01